< Rev History >

1) '23. 03. 08 - 초안 작성

Title	P0. REV HISTORY	
Size A3	Document Number <Doc>	Rev < 0.1 >
Date: Tuesday, March 14, 2023	Sheet 1 of 5	

LOGIC POWER STANDBY

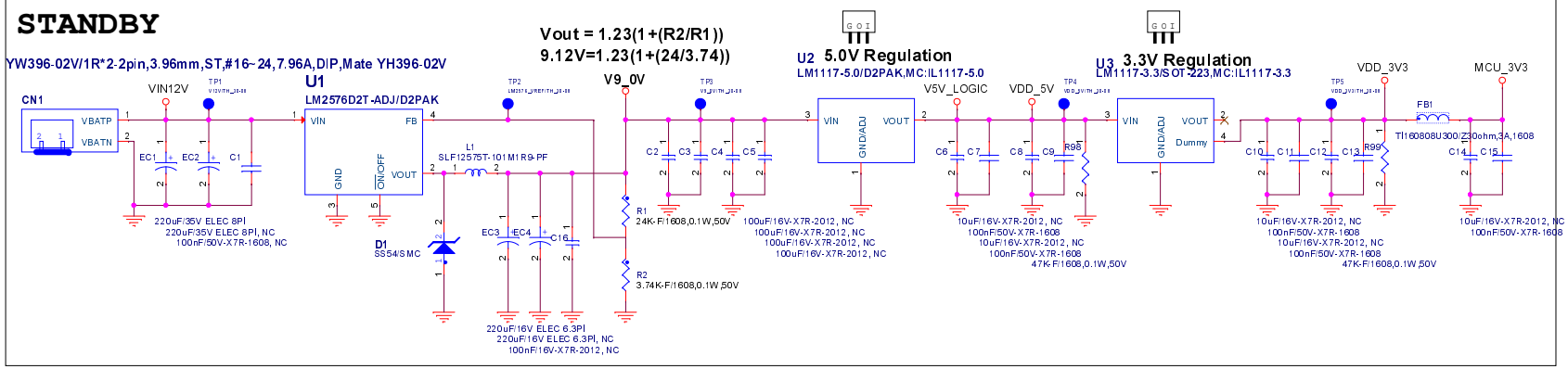

AQIC POWER CONTROL

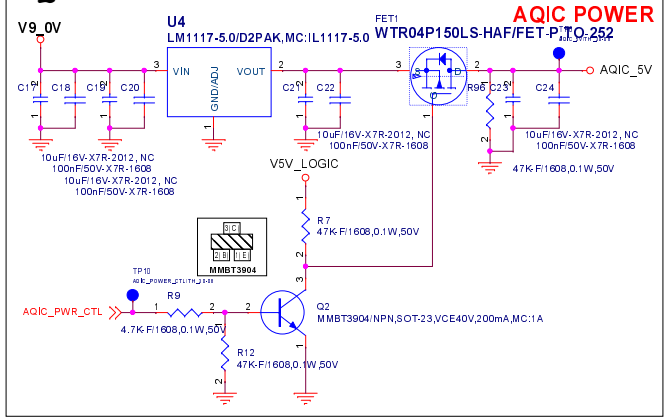

VLED POWER

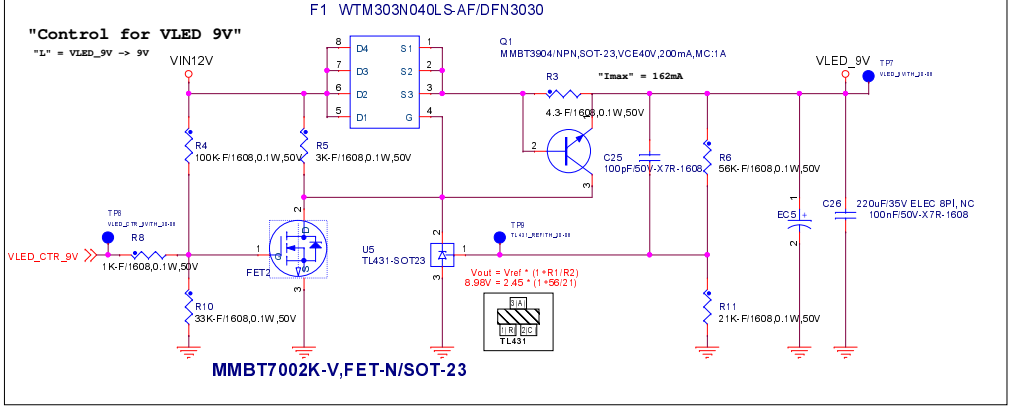

CAN POWER CONTROL

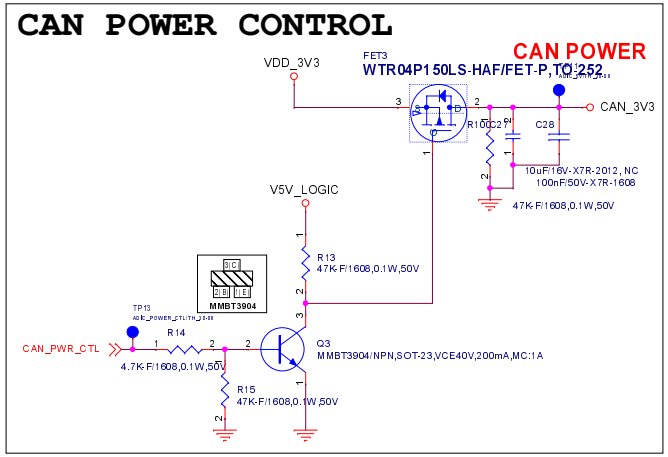

VREF

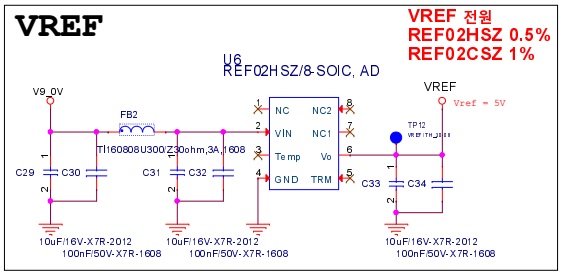

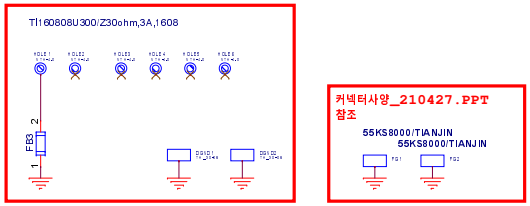

VEXT

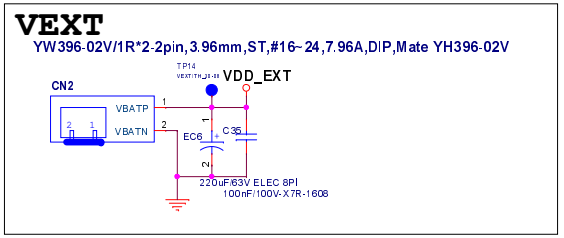

Title	P1. POWER LOGIC		
Size Custom	Document Number <Doc>		Rev <0.1>
Date: Monday, March 20, 2023	Sheet 2 of 5		

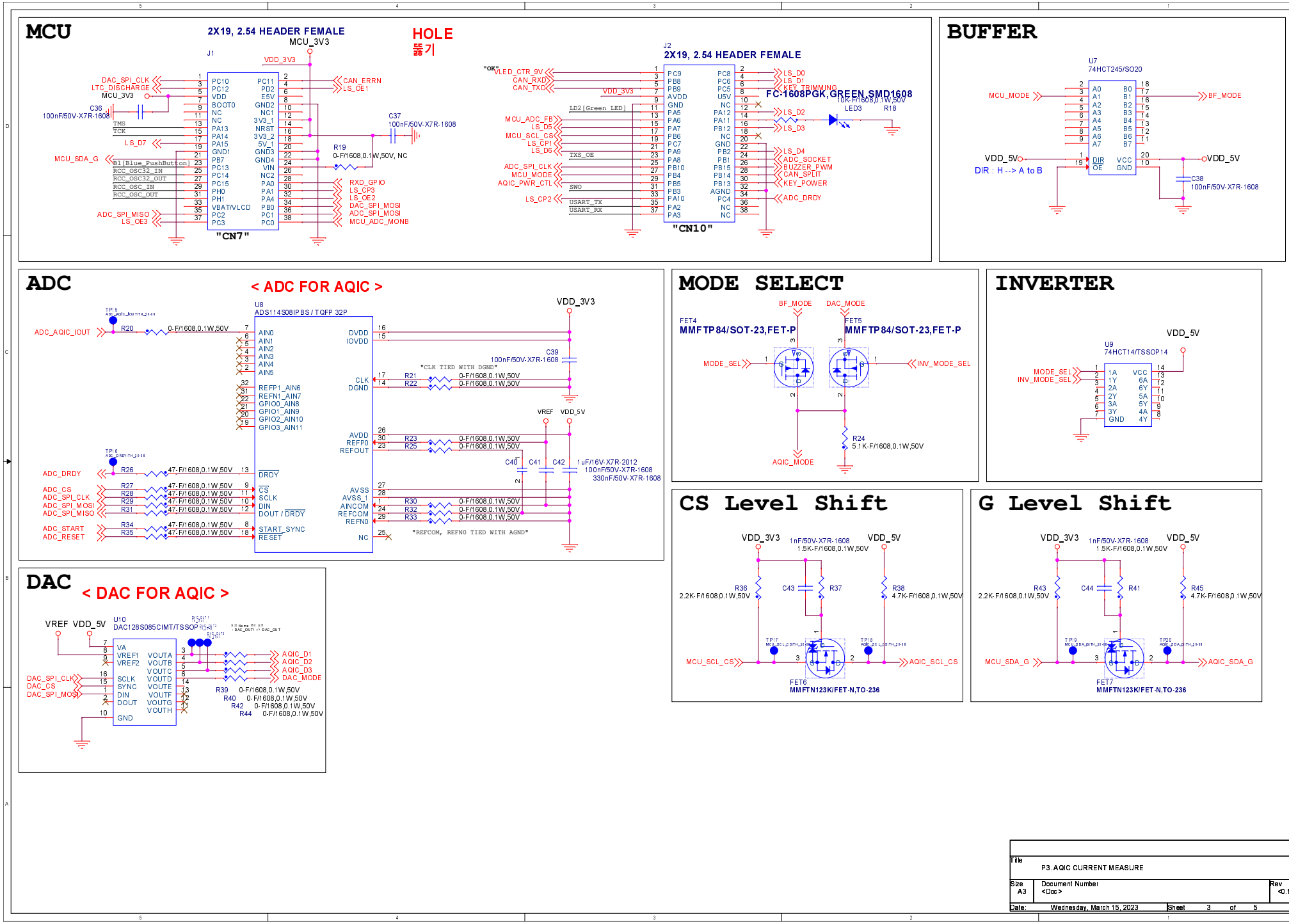
MCU
2X19, 2.54 HEADER FEMALE
HOLE
뚫기
J1
MCU_3V3
VDD_3V3
DAC_SPI_CLK
LTC_DISCHARGE
MCU_3V3
C36
100nF/50V-X7R-1608
TMS
TCK
LS_D7
MCU_SDA_G
B1[Blue_PushButton]
RCC_OSC32_IN
RCC_OSC32_OUT
RCC_OSC_IN
RCC_OSC_OUT
ADC_SPI_MISO
LS_OE3
CAN_ERRN
LS_OE1
C37
100nF/50V-X7R-1608
R19
0-F/1608,0.1W,50V, NC
RXD_GPIO
LS_CP3
LS_OE2
DAC_SPI_MOSI
ADC_SPI_MOSI
MCU_ADC_MONB
"CN7"
J2
2X19, 2.54 HEADER FEMALE
"OK"
VLED_CTR_9V
CAN_RXD
CAN_TXD
VDD_3V3
LD2[Green LED]
MCU_ADC_FB
LS_D5
MCU_SCL_CS
LS_CP1
LS_D6
TXS_OE
ADC_SPI_CLK
MCU_MODE
AQIC_PWR_CTL
SWO
LS_CP2
USART_TX
USART_RX
LS_D0
LS_D1
KEY_TRIMMING
FC-1608PGK,GREEN,SMD1608
10K-F/1608,0.1W,50V
LED3
R18
LS_D2
LS_D3
LS_D4
ADC_SOCKET
BUZZER_PWM
CAN_SPLIT
KEY_POWER
ADC_DRDY
"CN10"
BUFFER
U7
74HCT245/SO20
MCU_MODE
BF_MODE
VDD_5V
DIR : H --> A to B
VDD_5V
C38
100nF/50V-X7R-1608
ADC
< ADC FOR AQIC >
U8
ADS114S08IPBS / TQFP 32P
VDD_3V3
ADC_AQIC_IOUT
R20
0-F/1608,0.1W,50V
AIN0
AIN1
AIN2
AIN3
AIN4
AIN5
REFP1_AIN6
REFN1_AIN7
GPIO0_AIN8
GPIO1_AIN9
GPIO2_AIN10
GPIO3_AIN11
DVDD
IOVDD
C39
100nF/50V-X7R-1608
"CLK TIED WITH DGND"
CLK
DGND
R21
R22
0-F/1608,0.1W,50V
VREF
VDD_5V
AVDD
REFP0
REFOUT
R23
R25
C40
C41
C42
1uF/16V-X7R-2012
100nF/50V-X7R-1608
330nF/50V-X7R-1608
ADC_DRDY
R26
47-F/1608,0.1W,50V
DRDY
ADC_CS
ADC_SPI_CLK
ADC_SPI_MOSI
ADC_SPI_MISO
R27
R28
R29
R31
CS
SCLK
DIN
DOUT / DRDY
AVSS
AVSS_1
AINCOM
REFCOM
REFN0
R30
R32
R33
"REFCOM, REFN0 TIED WITH AGND"
ADC_START
ADC_RESET
R34
R35
START_SYNC
RESET
NC
MODE SELECT
BF_MODE
DAC_MODE
FET4
MMFTP84/SOT-23,FET-P
FET5
MMFTP84/SOT-23,FET-P
MODE_SEL
INV_MODE_SEL
R24
5.1K-F/1608,0.1W,50V
AQIC_MODE
INVERTER
VDD_5V
U9
74HCT14/TSSOP14
MODE_SEL
INV_MODE_SEL
CS Level Shift
VDD_3V3
VDD_5V
1nF/50V-X7R-1608
1.5K-F/1608,0.1W,50V
R36
2.2K-F/1608,0.1W,50V
C43
R37
R38
4.7K-F/1608,0.1W,50V
MCU_SCL_CS
AQIC_SCL_CS
FET6
MMFTN123K/FET-N,TO-236
G Level Shift
VDD_3V3
VDD_5V
1nF/50V-X7R-1608
1.5K-F/1608,0.1W,50V
R43
2.2K-F/1608,0.1W,50V
C44
R41
R45
4.7K-F/1608,0.1W,50V
MCU_SDA_G
AQIC_SDA_G
FET7
MMFTN123K/FET-N,TO-236
DAC
< DAC FOR AQIC >
VREF
VDD_5V
U10
DAC128S085CIMT/TSSOP
VA
VREF1
VREF2
SCLK
SYNC
DIN
DOUT
GND
VOUTA
VOUTB
VOUTC
VOUTD
VOUTE
VOUTF
VOUTG
VOUTH
DAC_SPI_CLK
DAC_CS
DAC_SPI_MOSI
AQIC_D1
AQIC_D2
AQIC_D3
DAC_MODE
R39
R40
R42
R44
0-F/1608,0.1W,50V
Title
P3. AQIC CURRENT MEASURE
Size
A3
Document Number
<Doc>
Rev
<0.1>
Date:
Wednesday, March 15, 2023
Sheet
3
of
5

AQIC CAN CONNECTOR

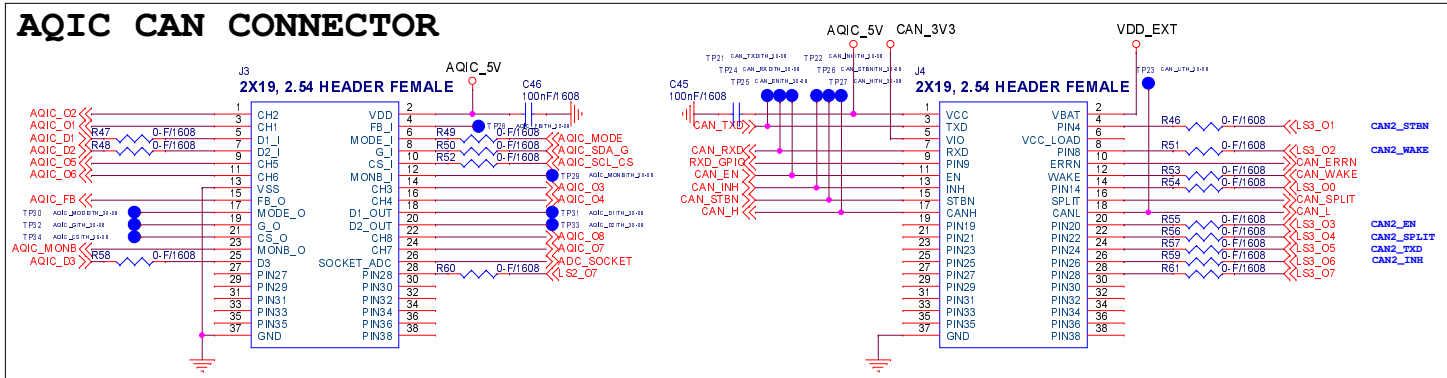

ADC_SOCKET

	ADC
AQIC06 QFN 2020	0.3V
AQIC08 QFN 3030	0.6V
AQIC06 QFN 3030	0.9V
CAN1 GCV1043SD	1.2V
CAN2 GCV7344	1.5V
RESERVED	1.8V
RESERVED	2.1V
RESERVED	2.4V
RESERVED	2.7V
RESERVED	3.0V

Latch

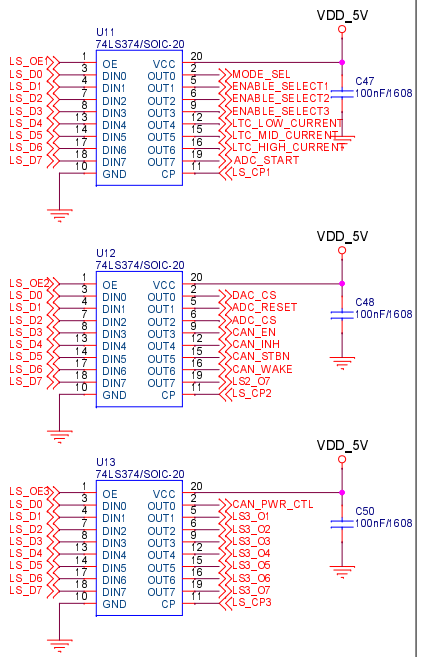

Buzzer

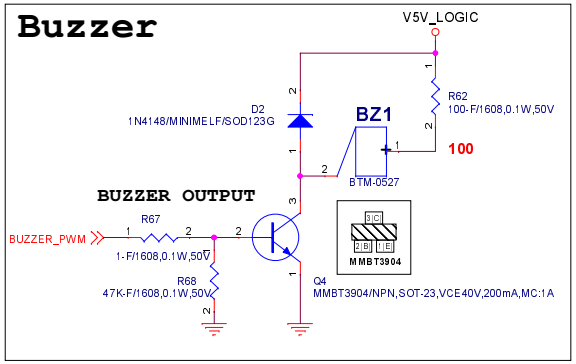

Switch

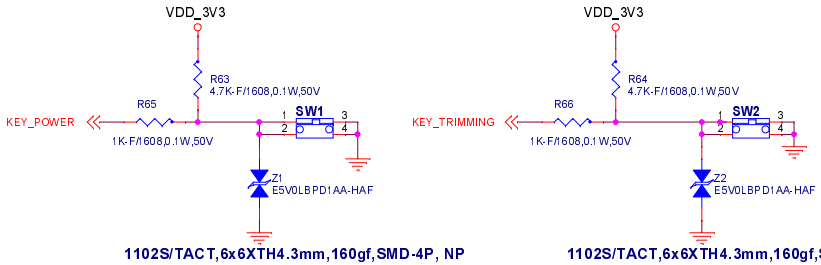

1102S/TACT,6x6XTH4.3mm,160gf,SMD-4P, NP

1102S/TACT,6x6XTH4.3mm,160gf,SMD-4P, NP

FB, MON

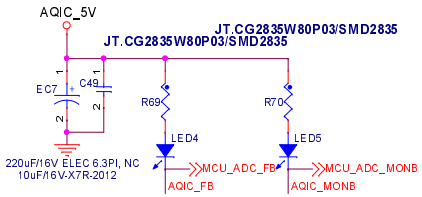

FD1 FD_MARK/1.0MM

FD2 FD_MARK/1.0MM

FD3 FD_MARK/1.0MM

Title <Title>			
Size A3	Document Number <Doc>		Rev <RevCode>
Date: Thursday, March 16, 2023	Sheet 4 of 5		

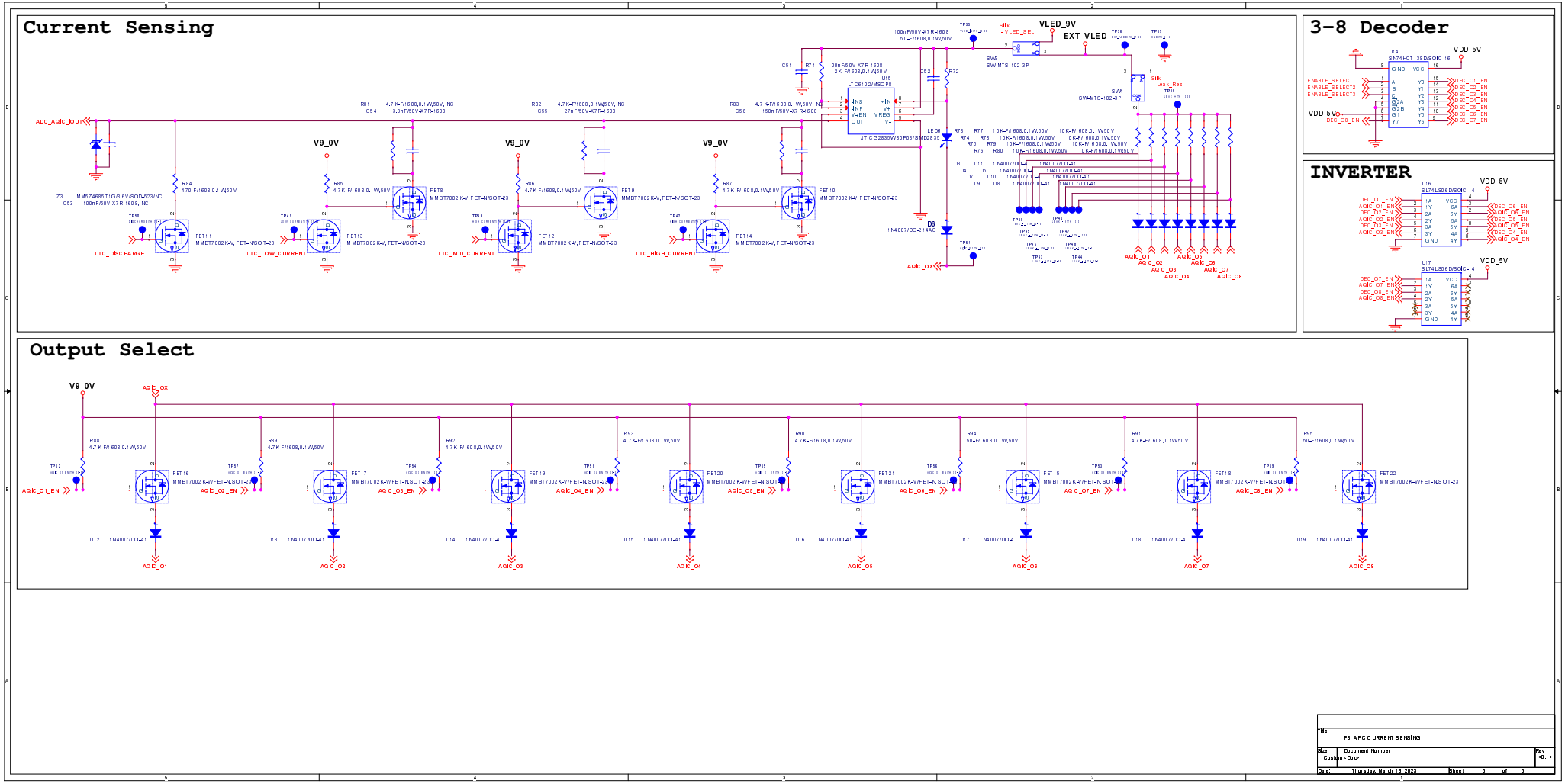
Current Sensing
3-8 Decoder
INVERTER
Output Select
VLED_9V
EXT_VLED
V9_0V
VDD_5V
ADC_AGIC_IOUT
LTC_DISCHARGE
LTC_LOW_CURRENT
LTC_MID_CURRENT
LTC_HIGH_CURRENT
AGIC_OX
AGIC_01
AGIC_02
AGIC_03
AGIC_04
AGIC_05
AGIC_06
AGIC_07
AGIC_08
AGIC_01_EN
AGIC_02_EN
AGIC_03_EN
AGIC_04_EN
AGIC_05_EN
AGIC_06_EN
AGIC_07_EN
AGIC_08_EN
ENABLE_SELECT1
ENABLE_SELECT2
ENABLE_SELECT3
DEC_09_EN
DEC_01_EN
DEC_02_EN
DEC_03_EN
DEC_04_EN
DEC_05_EN
DEC_06_EN
DEC_07_EN
DEC_08_EN
AGIC_01_EN
AGIC_02_EN
AGIC_03_EN
AGIC_04_EN
AGIC_05_EN
AGIC_06_EN
AGIC_07_EN
AGIC_08_EN
Title
P3. AFIC CURRENT SENSING
Size
Custom
Document Number
Rev
<0.1>
Date:
Thursday, March 16, 2023
Sheet
5
of
5